KPSS – 1200/1

POST SPECIFICATIONS

Dimensions:
Height: 1200mm
Width x Depth: 100mm x 100mm
Cable Entry Hole Diameter: 80mm
Finish: Brushed Dull Polish

BASE

Base Size: 250mm x 250mm
Fixing Holes Positioning (from edges): 25mm
Fixing Holes Diameter ∅: 15mm

ACCESS SECURITY SOLUTIONS

access-securitysolutions.co.uk

FRONT VIEW

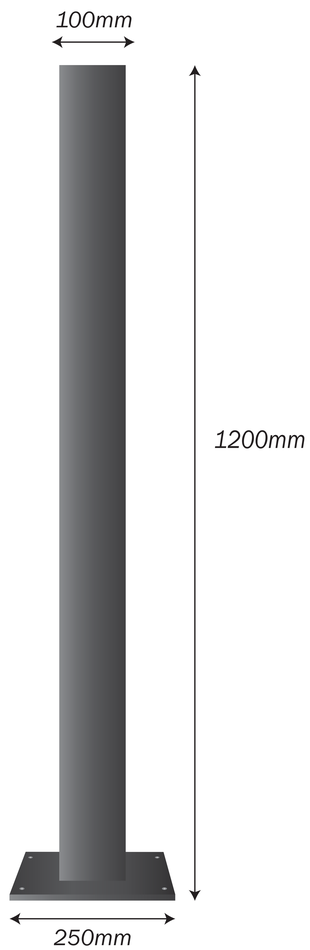

SIDE VIEW

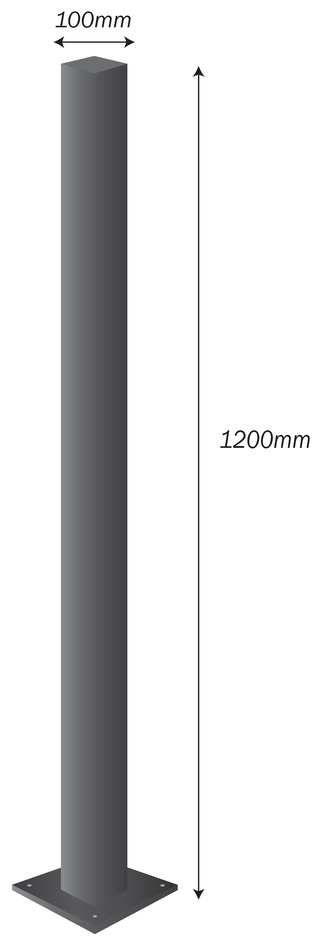

BASE & BASE CABLE ENTRY

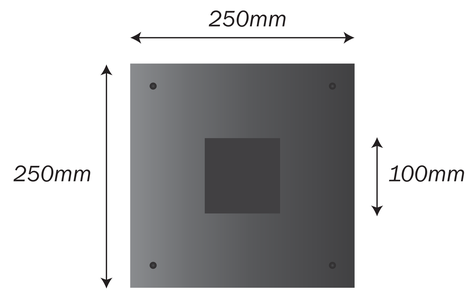

Base & Post Size

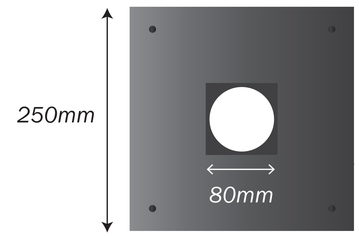

Cable Entry Hole

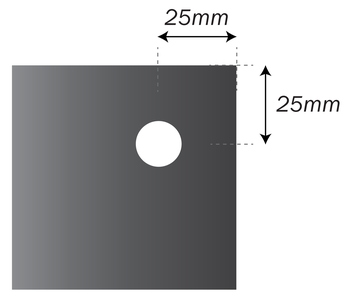

Fixing Hole Location

NOT TO SCALE
All measurements are approximate.

T: 01327 358888
E: sales@access-securitysolutions.co.uk