KPSS – 1200/21

FRONT VIEW

BACK VIEW

SIDE VIEW

BASE & BASE CABLE ENTRY

POST SPECIFICATIONS

Dimensions:
Height: 1200mm
Width x Depth: 200 x 100mm

Finish: Brushed Dull Polish

BASE

Base dimensions: 250 x 250mm

Fixing holes positioning (from edges): 25mm

Fixing holes diameter Ø: 15mm

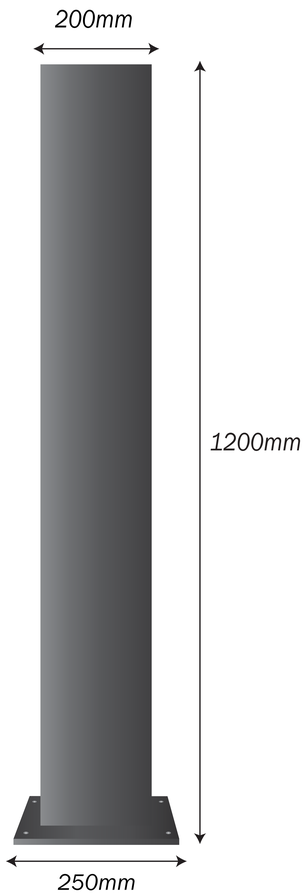

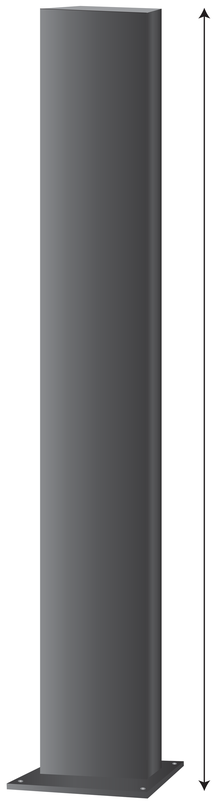

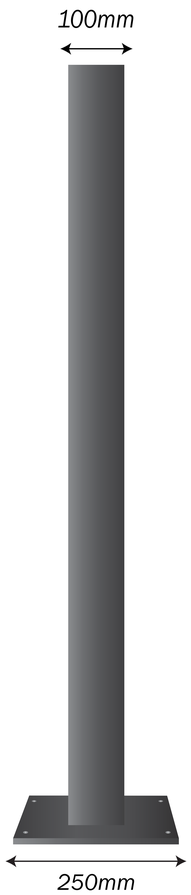

Base & Post Size

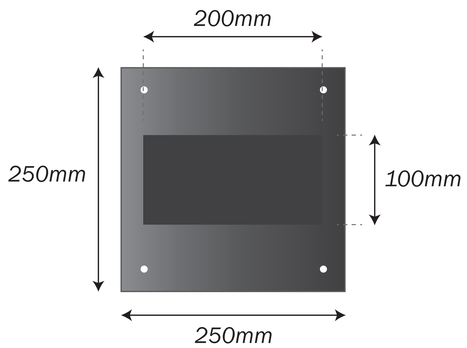

Fixing Hole Location

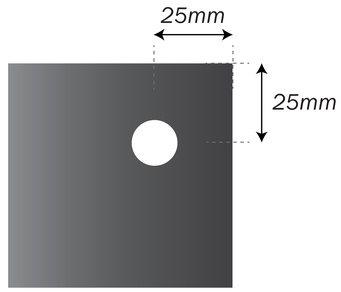

ACCESS SECURITY SOLUTIONS

access-securitysolutions.co.uk

NOT TO SCALE
All measurements are approximate.

T: 01327 358888
E: sales@access-securitysolutions.co.uk